DESIGN AND FABRICATION OF A DEEP DRAWING MACHINE: EXPERIMENTAL STUDY OF DRAWING FORCE VS DRAWING STROKE

Ahmed Ramahi, ramahi@najah.edu, a_ramahi@yahoo.com**.** Industrial Engineering Department, An-Najah National University, Nablus, Palestine.

Yahya Saleh, saleh_yahya@yahoo.com**.** Industrial Engineering Department, An-Najah National University, Nablus, Palestine.

ABSTRACT

This Paper represents the work implemented in designing, fabricating and operating a model of a cheap hydraulic deep drawing machine (DDM), which is currently utilized in the manufacturing processes lab in the Industrial Engineering Department (IED) at An-Najah National University. The machine is being used in conducting different experiments related to the deep drawing process.

As known, deep drawing is a sheet-metal working process in which a punch draws a blank sheet into a die cavity to form cup-shaped or box-like parts [1].

This work was carried out in three stages; the first was the design stage, in which all design calculations of the DDM elements were completed based on the specifications of the product (cup) to be drawn. The second was construction stage, in which the DDM elements were fabricated and assembled at the engineering workshops of the university. The last was the operation and experimentation stage, in which the DDM was tested by conducting different experiments.

In conclusion, the experience gained in designing and constructing a mechanical lab equipment was found to be successful in terms of obtaining practical results that agree with those available in literature, saving money relative to the cost of a similar purchased equipment, as well as enhancing students' abilities in understanding the deep drawing process in particular and machine elements design concepts in general.

Keywords: Deep Drawing, Machine Element Design, Dei Design, Machine assembly and Fabrication, Experimental Investigation of Draw Force and Draw Stroke

1. ITRODUCTION

Deep drawing is a sheet- metal working process used to form cup- shaped or box –shaped parts by using a punch that draws a blank into a die cavity. This process is carried out by placing a blank sheet of certain size over the opening of the die and pressing this blank into the die cavity with a punch, as shown in Figure 1, [1]. Typical products made by this process are beverage cans, bathtubs, containers of different sizes and shapes, sinks, and automobile panels.

In this paper, the basic drawing operation is studied, which is the drawing of a cup-shaped part with parameters as shown in Figure 1, in this basic operation a circular blank sheet of a diameter D_b and a thickness t, is placed over the die opening of a die having a corner radius R_d. Then the blank is held by a blank holder (hold-down ring) with certain force. After that a punch of a diameter D_p and a corner radius of R_p is used to punch the blank sheet into the die cavity, thus forming the cup-shaped part. Moreover, the punch moves at a certain velocity V and applies a certain down ward force F to achieve the deformation of the metal, while the blank holder applies holding force F_h to prevent blank wrinkling.

Actually, this paper presents the design and fabrication of a cheap Deep Drawing Machine "DDM" that produces pre-identified cup-shaped product, the DDM is now mounted and being used for experimentation in the Manufacturing Processes Lab in the IE department at An-Najah University, the paper presents the detailed design of the DDM main elements including the punch and the die, and the fabrication & assembly of the DDM, it also presents the operation and testing of the DDM through conducting experiments on drawing force versus drawing stroke and compare the results with published data.

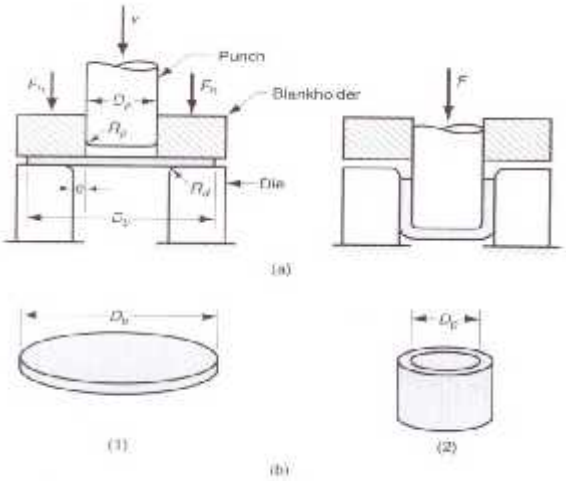

Fig. 1: (a) Drawing of a cup_ shaped part: (1) start of operation before punch contacts work and (2) near end of stroke; and (b) corresponding workpart: (1) starting blank and (2) drawn part. Symbols C = clearance, D_b = blank diameter, D_p = punch diameter, R_d = die corner radius, R_p = punch corner radius, F = drawing force, F_h = holding force.

2. DEEP DRAWING: GENERAL BACKGROUND

This section discusses some general concepts of the deep drawing process including the drawing measures, drawing force and holding force

Deep Drawing Measures:

One of the most important measures of deep drawing operation is the limiting drawing ratio *LDR*. Limiting drawing ratio is defined as the maximum ratio of blank sheet diameter to punch diameter that can be drawn under ideal conditions in one stroke without failure [2].

That is,

$$LDR = \frac{D_{b\max}}{D_P} \tag{1}$$

An approximate upper limit on the drawing ratio is a value of 2. [1].

Another measure of drawing is the reduction, Re, which is defined as

$$\mathrm{Re} = \frac{D_b}{D_b} - \frac{D_p}{D_b} = 1 - \frac{1}{LDR} \tag{2}$$

The reduction is closely related to *LDR* and its value should be less than 0.5. A third measure of deep drawing operation is the thickness to diameter ratio" t/D_b ", which is often expressed as a percent. It is preferable that t/D_b ratio to be greater than 1%. As t/D_b decreases, the tendency for wrinkling increases [1].

In fact, the punch – to – die clearance is usually some 10% larger than the sheet thickness to accommodate blank thickening during the drawing process, [2]. Thus, the clearance (C) can be expressed as

$$C = 1.1t \tag{3}$$

The Drawing Force:

The force in the punch required to produce a cup is the summation of the ideal deformation force, the frictional forces, and the force required to produce ironing. Figure 2 shows the relation between the draw force and the draw stroke [2].

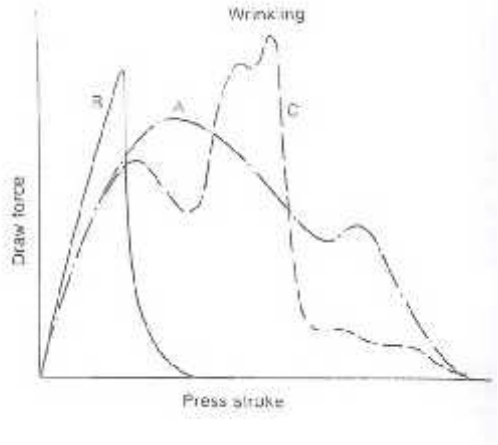

Fig. 2: Punch force vs. punch stroke for deep drawing. Curve A typical of drawing with optimum plank holder pressure

The following equation has been developed to approximate the total punch force to deep draw a blank of D_b , at any stage in the process [3] ,

$$F = \left[® * D_p * t\left(1.1 \pm_{avg.}\right) * \ln\left(\frac{D_b}{D_p}\right) + « \left(2 * F_h \left(\frac{D_b}{D_p}\right)\right)\right] * \exp\left(« * \left(\frac{®}{2}\right)\right) + B \qquad (4)$$

Where:

F = total punch force, $\pm_{avg.}$ = the average flow stress, d = punch diameter, D = blank diameter, F_h = blank holding force, B = force required for bending and unbending blank, t = wall-thickness. « = coefficient of the friction.

However, equation (4) is somewhat difficult to deal with because of the many variables involved in the operation and because deep drawing is not a steady – state process. Hence, an approximate equation of the maximum punch force (F) has been developed as [2].

$$F = ® \, D_b \, t \, (UTS)\left(\frac{D_b}{D_p} - 0.7\right) \qquad (5)$$

In which:

F = maximum drawing force, in lb, (N). t = original blank thickness, in (mm), UTS = ultimate tensile strength, (lb/in^2), (M Pa). D_b, D_P = are the starting blank diameter and punch diameter *in* (*mm*), respectively.

The drawing force F varies throughout the downward movement of the punch, usually reaching its maximum value at about one-third the length of the punch stroke [1].

Blank Holding Force:

The holding force F_h plays an important role in the deep drawing. As a rough approximation, the holding pressure can be set at value equals 0.015 of the yield strength of the sheet metal [1].

Thus by multiplying the holding pressure by the portion of the starting area of the blank which is to be held by the blank holder, we can estimate the holding force (F_h) as [1].

$$F_h = 0.015 S_y ® \left[D_b^{\ 2} - (D_p + 2.2t + 2R_d)^2 \right] \tag{6}$$

Where F_h = maximum holding force in deep drawing, *Ib*, (*N*), S_y = yield strength of the sheet metal, lb/in^2 (*MPa*), R_d = die corner radius, *in* (*mm*).

Tooling and Equipment:

A double-action mechanical press is generally used for deep drawing, hydraulic presses are also used. The double action press controls the punch and blank holder independently and forms the part at a constant speed.

Since blank holder force controls the flow of the sheet metal within the die, now presses have been designed with variable blank- holder force. In these presses the blank holder force is varied with punch stroke.

The most important factor in the die design is the corner radius (R_d) of the die. This radius must have an optimum value since the material is pulled over it. The value for the optimum radius of the die depends upon the print requirement and the type of the material being drawn. Obviously, the smaller the die radius, the grater the force needed to draw the cup. The radius of the die may be between four to eight times the thicknesses of the blank [3].That is

$$4t \le R_d \le 8t \tag{7}$$

Practically, it is recommended to start with R_d equal $4t$ and increase it if necessary.

Similarly, the punch nose radius (R_p) is important since it shapes the radius of the bottom of produced cup. If R_p is too small, the bottom radius of the cup may tear out. It may be necessary to make the radius larger than needed, and reduce its size in subsequent drawing operations. As a start, a $4t$ radius –to- blank thickness may be used. [3].

3. CUP SPECIFICATIONS AND DRAWING & HOLDING FORCE CALCULATIONS

The DDM was designed to produce cup-shaped parts in a single stroke, as stated earlier, the purpose of designing the DDM is to provide the manufacturing processes lab at An-Najah University with an apparatus that can demonstrate the deep drawing process and also be used by students to perform some basic experiments related to the deep drawing process. Actually, in order to design a proper DDM, it is necessary first to determine the product (the cup) specifications, drawing force and holding force.

Cup Specifications

The product of the required DDM is chosen to be a simple cup having a certain inner diameter (*d*) and depth (*h*) and to be produced using a sheet metal of thickness (*t*).

The dimensions of the cup must be selected such that the deep drawing operation is feasible to produce the cup in single stroke; to measure the feasibility of the operation, the *LDR*, thickness-to-diameter ratio (*t*/*D*) and the reduction (*Re*) percentage must satisfy the feasibility conditions mentioned in section2 of this paper. To do so, It was decided that the thickness of the sheet metal to be used in producing the cup is $t = 1/32\,in. = 0.8mm$, hence -based on the recommendations stated in section 2- the corresponding die radius is $R_d = 1/8\,in. = 3.2mm$, punch radius is $R_p = 4t = 4/32 = 1/8\,in. = 3.2mm$, and the clearance (C) corresponding to $t = 0.8mm$ is $C = 1.1t = 1.1(0.8) = 088 \approx 0.9mm.$

It was also decided that the final cup would have a depth of 20 *mm* and inner diameter d of 50 *mm*. The part is shown in figure 3. Now, the blank diameter D_b can be calculated using the following formula [3]:

$$D_b = \sqrt{d^2 + 4d(H - 0.43r)} \tag{8}$$

In which $d =$ cup mean diameter, *in* (*mm*). $H =$ mean high of the cup's shell, r = radius at neutral bend line. Using equation (8) and the cup dimensions of figure 3, D_p is calculated to be D_p = 80 *mm*. With D_p = 80 *mm*, one can show that the three drawing feasibility measures are satisfied and the cup can be produced in a single stroke.

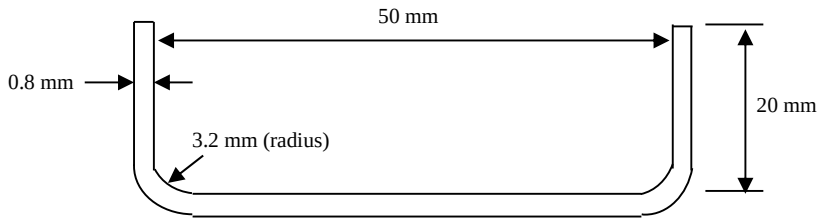

Fig. 3: The Final Cup

Determination of Drawing Force and Blank Holding Force

The cup is to be produced from Yellow Brass C 26800 (65% Cu, 35%Zn) with $UTS = 322MPa, S_y = 98MPa.$

Using equation (5) with D_p = 50 *mm*; one can calculate the drawing force to produce the cup as F = 36.4 *KN*. Similarly, from equation (6) F_h = 14 *KN*. So the total drawing force (F_d) to be applied by the DDM equals the summation of F and F_h, that is F_d = 50.4 *KN*. For design purposes of DDM elements; the F_d shall be multiplied by a load factor equals to 1.6.

4. DESIGN OF THE DEEP DRAWING MACHINE ELEMENTS

This section presents the design of selected main elements of the deep drawing machine (DDM). Figure (4) shows a section of the DDM, its elements and the associated legend. Figure (5) is its photo.

12- Hydraulic cylinder inlet.
13- Hydraulic cylinder outlet
14- Blank holder upper plate.
15- Blank holding springs.
16- Blank holder lower plate.
17- The punch.
18- The die.
19- The die basement.
20- Machine basement.
21- Machine bench.
22- Lower support plate.
1- Lower Support plate fixing screws.
2- Ejector spring.
3- Ejector.
4- Main supporting rods.
5- Blank holder fixing screws (M10).
6- Arm of hydraulic cylinder.
7- Upper support plate.
8- Hydraulic cylinder fixing screws.
9- Hydraulic cylinder (Piston).
10- Machine basement fixing screws
11- Machine table.

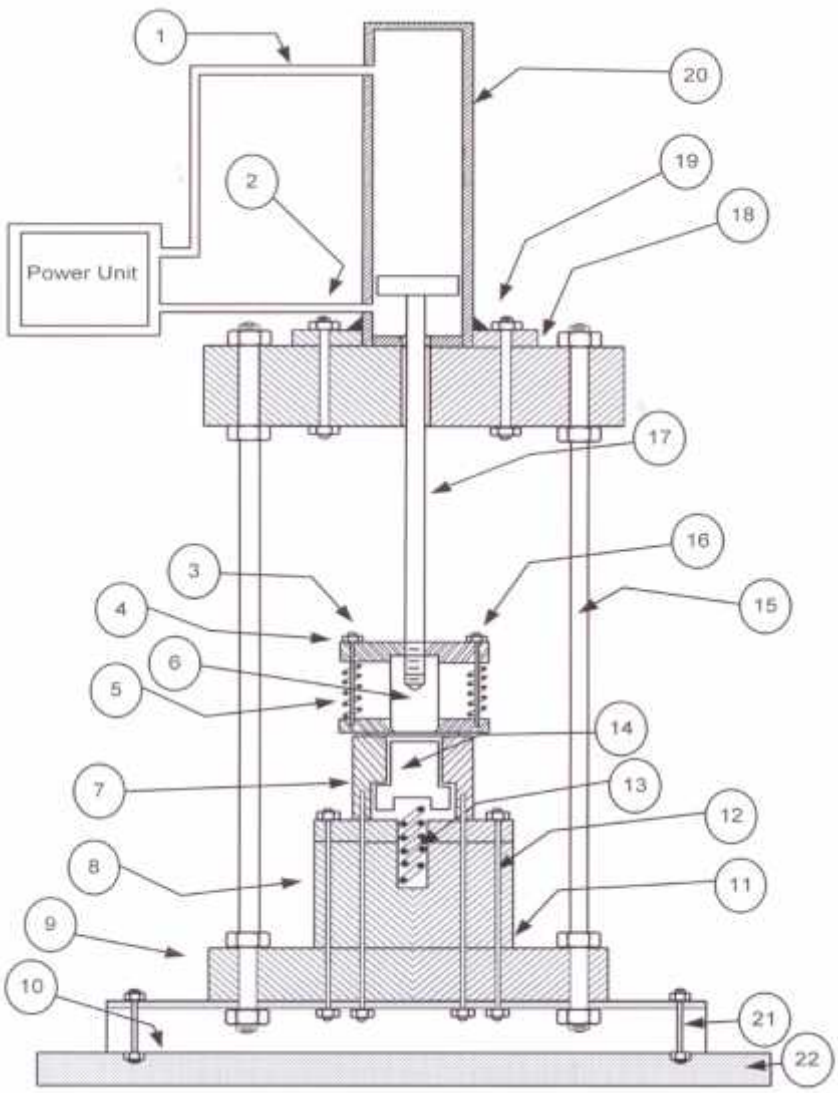

Fig. (4): Section of the DDM; Its Elements and the Associated Legend

Fig. (5): Photograph of the DDM

Design of the Die and the Punch

Once the cup specifications have been determined as previously explained, one can determine the specifications of the die and the punch being used to produce that cup.

Namely, the punch must have an outer diameter equal to the inner diameter of the cup, i.e. of 50 *mm*. It also has to be high enough to produce the required depth (20 *mm*) of the cup. Hence, the punch was designed to have an outer diameter of 50mm, punch radius (R_p) of 3.2 *mm*, and a height of 80mm.

Die and punch are the mating parts in this process; therefore, the internal diameter of the die will be the same as of punch outer diameter plus the compensation of the clearance between them. Figure (6) illustrates the dimensions of the die.

Design/ Safety Analysis of the Upper Support Plate

The upper support plate, as its name indicates, is used to support the DDM by holding the hydraulic cylinder of the machine. Therefore, the design of this plate must be based on the maximum force provided by the hydraulic unit which equals 1.6 F_d = 80 *KN*. Figure (7) shows the dimensions of this plate, while Figure (8) is the free body diagram of the plate. As shown in figure (8), the loaded part of this plate can be approximated as a fixed support from both ends with a center load applied by the hydraulic unit.

The reactions at A and C are same and equal to 40 *KN*, and the moments at A, B, and C equal M_A = 2090 *Nm*, M_B = 2200 *Nm*, and M_C = 2090 *Nm*, respectively [4]. Section B (the mid span) is the critical section. Under this loading, the maximum normal stress in this section equals to 27.7 *MPa*. The plate is made of Hot Rolled steel with S_y = 170 *MPa*, Hence, the factor of safety guarding against yielding of the upper plate equals 6.

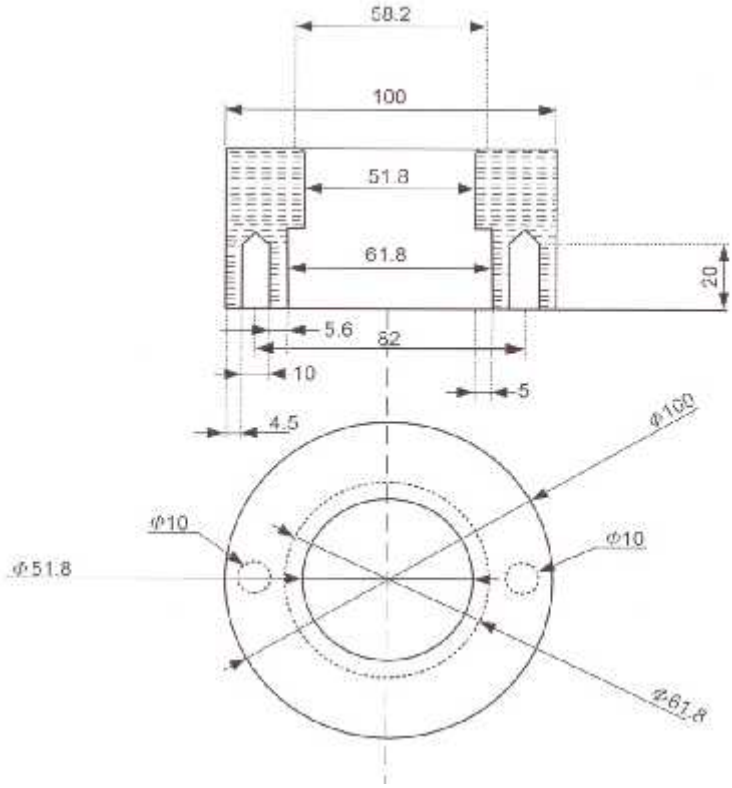

Fig. (6): Die Dimensions

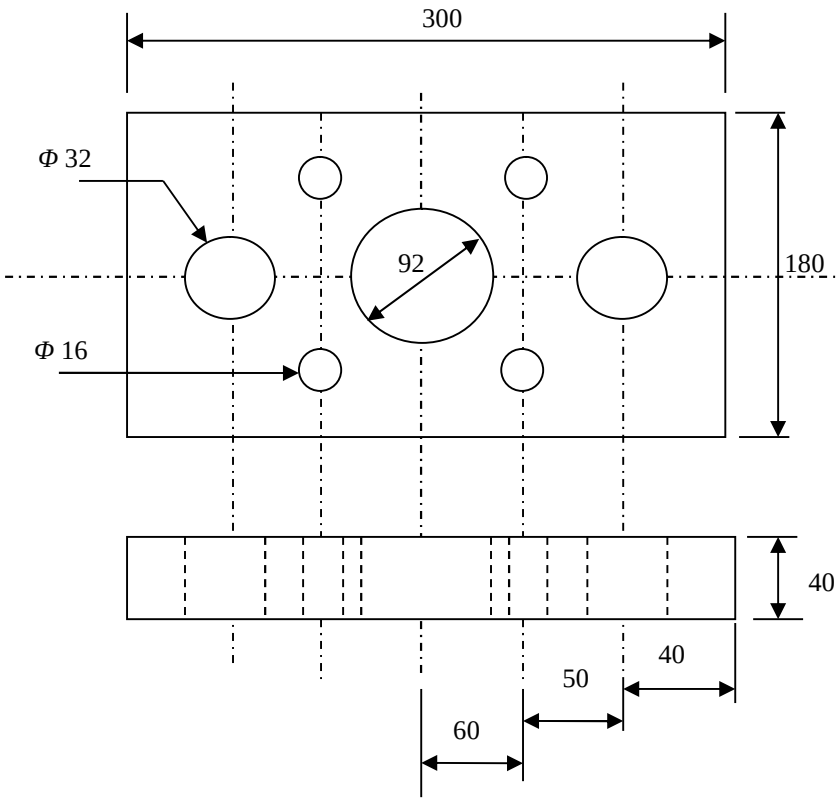

Fig. (7): Dimensions of Upper Support Plate (*mm*)

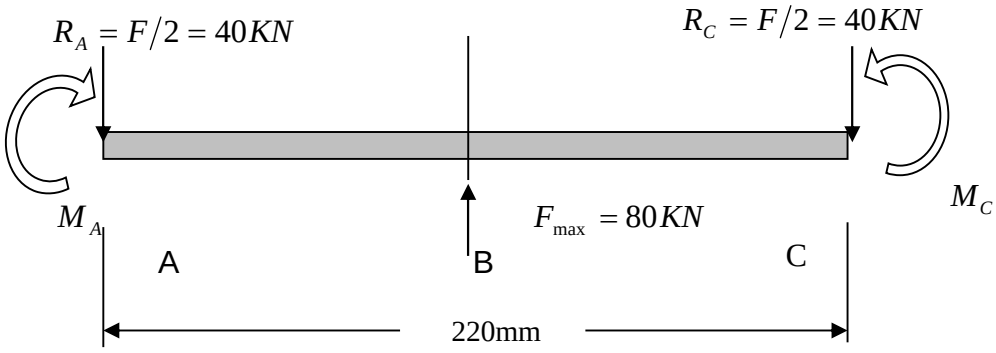

Fig. (8): Free Body Diagram of the Upper Support Plate.

Design/ Safety Analysis of the Main Supporting Rods

The DDM is supported by two main rods; these rods are connected between the upper support plate and the lower support plate.

The rods will carry equal loads, so what is applied to one will be the same for the other. Figure (9) shows the free body diagram of one main rod.

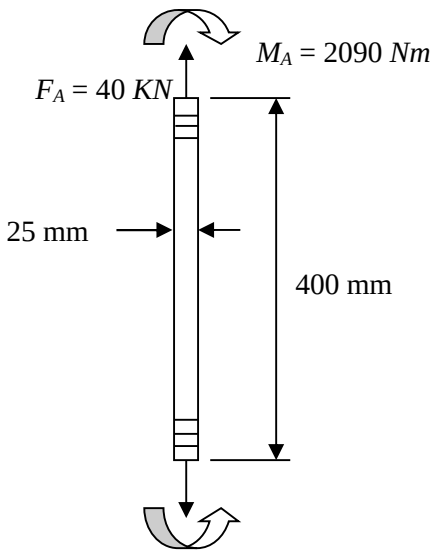

Fig. (9): FBD of Main Rod

One can show that the combined normal stress in the rod due to axial and bending loads is around 160 *MPa*, and as the rod is made of stainless steel with S_Y = 240 *MPa*, then the factor of safety guarding against yielding of the rod will equal around 1.5.

Design of the Blank holder Unit

This unit has three main parts; these are the upper and lower blank holding plates and the blank holding springs. The required blank holding force is transmitted from the hydraulic arm through the blank holding springs as a varying load to the blank holder lower plate which holds the blank. In order to exert the necessary holding force F_h, 7 springs were used; each has stiffness (*K*) of 32 *N/mm*. The dimensions of one blank holding spring and the blank holding lower plate are shown in figure (10).

The Ejector

Once the punch completes its stroke, the blank holding unit is then moved upward and the final cup is ejected upward by the ejector which is connected to a spring with a stiffness ($k = 15N/mm$) to provide the required force needed for ejecting the cup. The dimensions of the ejector are shown in figure (11)

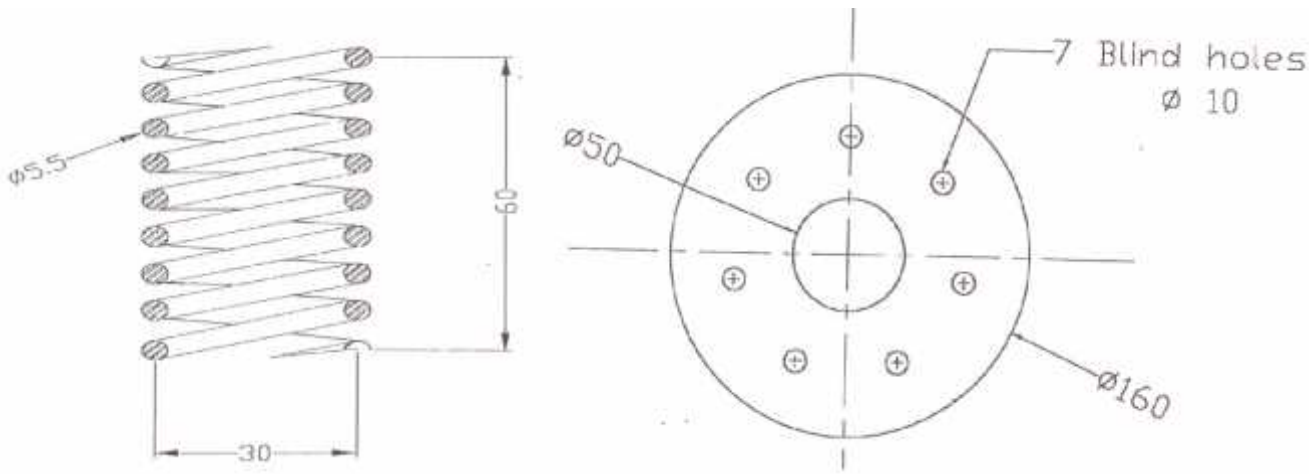

Fig. (10): Dimensions of a Blank Holding Spring and the Blank Holding Lower Plate (*mm*)

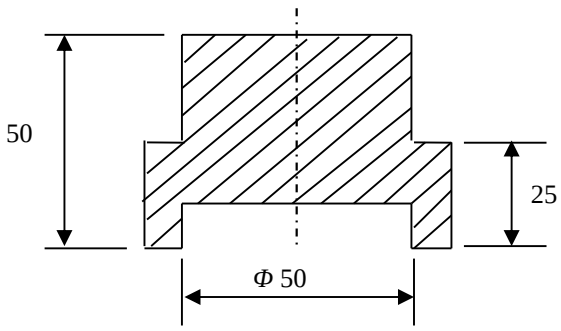

Fig. (11): Dimensions of the Ejector (*mm*)

Design of the Hydraulic System

An important part of the DDM is the hydraulic unit; the unit that provides the machine with the power needed to complete the drawing cycle. Actually, three issues have to be considered in designing the hydraulic unite; these are the power required, the factor of safety of the hydraulic cylinder fixing screws, and that of the hydraulic cylinder weld between the cylinder and its flange. A one horse power hydraulic pump is used in the DDM; this power is enough to drive the punch at a speed of 10 *mm/sec*. Note that the internal diameter of the hydraulic cylinder is 80 *mm*, and the diameter of its flange is 180 *mm*.

5. MANUFACTURING AND ASSEMBLY OPERATIONS

This section presents the manufacturing operations that were needed to produce DDM main parts (namely the punch and the die). Most of these operations were metal machining and some welding.

Die Manufacturing Operations

The recommended material for deep drawing dies is mostly oil-hardened steel; which we used for producing the DDM die.

A solid circular stock piece of oil-hardened steel was selected with a length 60 *mm* and a- diameter of 110 *mm*. The following is the list of manufacturing operations to produce the die-with a brief description of each operation- arranged sequentially:

1. External turning processes: these are the processes that were performed on the die solid stock piece using the lathe machine to reduce the diameter from 110 *mm* to 100 *mm*.
2. Internal turning processes: these are performed using the lathe machine to make a two – step hole into the die. One has inner diameter of 61.8 *mm*, and the other 51.8 *mm*.
3. Fillet-making processes: This process is combination of internal and external turning on the die to make the filet with a radius (R_d) of 3.2 *mm* by using the lathe machine.
4. Drilling processes: these are vertical drilling operations performed- by using a vertical drill- to make two blind holes each for a depth of 20 *mm* and a diameter of 10 *mm*. These holes were used to fix the die with its basement.
5. Threading processes: these are the manuals threading processes performed for making the internal threads in the two blind holes. These performed using a HSS top tap.
6. Surface Finish Processes: these processes were performed for smoothing the external surface, inner surface, and the two faces of the die by using a glass papers while the die was fixed on the lathe machine.

Punch Manufacturing Operations

Likewise, the punch was made from the same material of the die; oil – hardened steel it started with a solid stock piece with a length of 90 mm and a diameter of 60 *mm*.

The following is the list of all manufacturing processes performed to produce the punch, Arranged sequentially.

1. External turning processes: These are the processes done to reduce the outer diameter of the starting stock piece from 60 *mm* to 50 *mm*.
2. Drilling processes: the processes performed on to make a blind hole of a depth of 20 *mm* and of diameter of 19 *mm*.
3. Ventilation-Holes Drilling Processes: these processes were performed to make two holes in the body of the punch; one is vertical and the other is horizontal; these holes were made to prevent air from accumulation into the cup and this will increase the force required for drawing. The processes were done by vertical drill press.
4. Fillet – Making Processes: these processes are similar to those of the die fillet-making.
5. Surface Finish Processes: These were performed for the same purposes of that of the die.

Die and Punch Heat Treatment

The mechanical properties of the punch and the die (especially the hardness) must be improved such that these two mating parts can handle the total drawing force without any type of distortion or deformation, to achieve this purpose the die and the punch were heat treated as explained in the following steps:

1. The punch and the die were preheated to 850 C^0 and left in the oven for a period of 30 minutes.
2. The punch and the die were quenched into a mineral oil medium
3. The die and the punch were tempered at 250 C^0 for 30 minutes.

The hardness of the punch and the die before heat treatment was 300 VHN, after heat treatment the hardness became 900 VHN. The hardness was measured using Vickers hardness tester available in the materials science laboratory at An-Najah N. University.

Sequence of Assembly Operations

Once the DDM components have been manufactured and prepared, these elements were assembled with each other until the whole machine is totally constructed and operated. The assembly process chart figure (12) shows the sequence of assembly operations of the DDM.

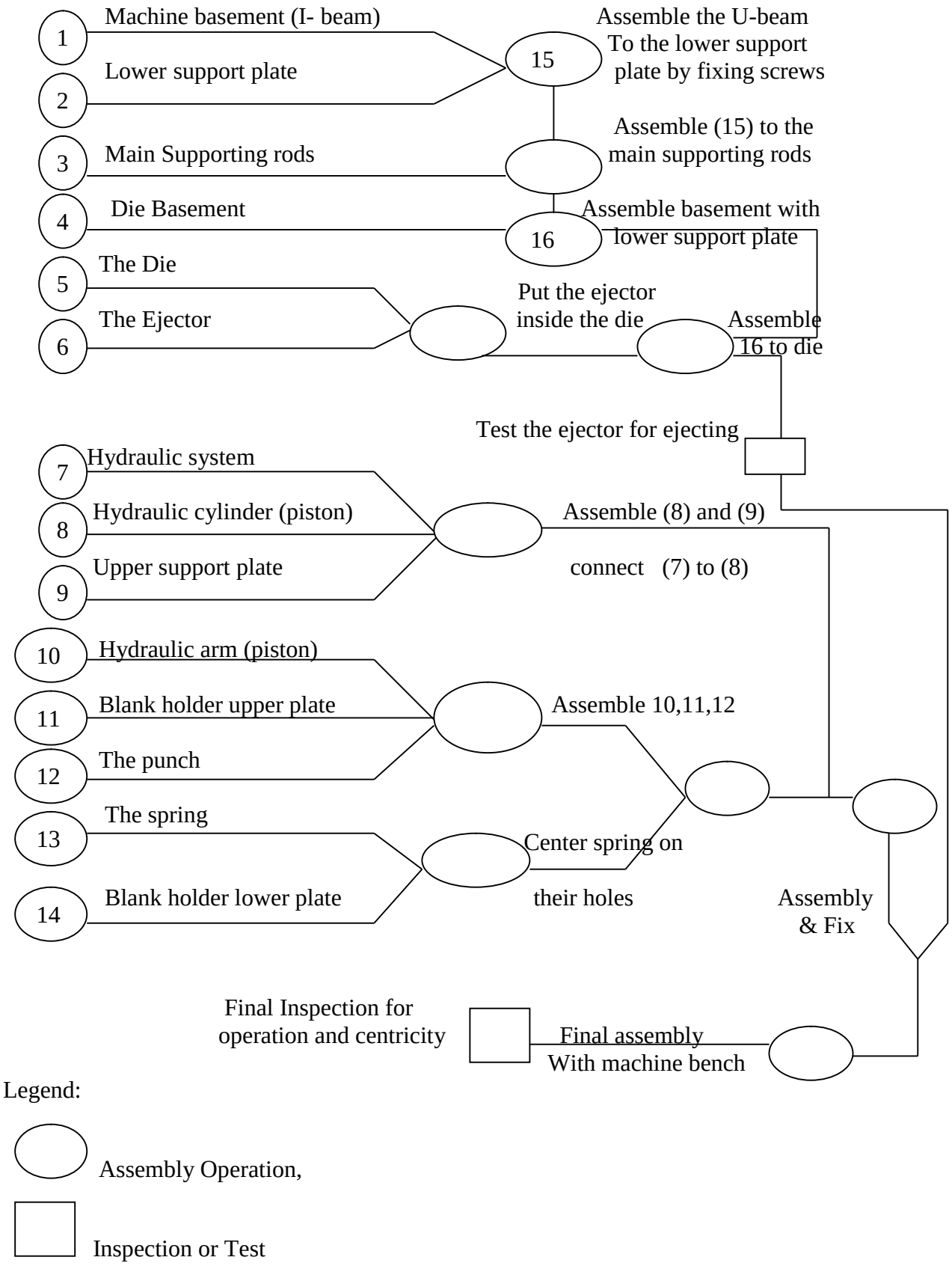

Fig. (12): Assembly Operations Flow Chart

6. DDM OPERATION AND EXPERIMENTATION

After the DDM had been designed, manufactured, and assembled, the machine was operated and tested to ensure appropriate operation and working. After that, two experiments were performed on the DDM, one is to investigate the relation between the drawing force (punch force) and the punch stroke, while the other experiment is to investigate and study the effect of strain factor on the limiting drawing ratio (LDR). A standard experiment handout was prepared for each of the two experiments to be used by students in the manufacturing processes lab. In here, Figure (13) demonstrates sample result on the relation between drawing force ($F = F_d - F_h$; F_h is calculated by knowing springs deflection) and drawing stroke for brass cups; which agrees with the general trend shown in figure 2. The data is measured using pressure and dial gages.

7. Conclusions

This paper presented the work done and experience gained in designing, constructing and operating a hydraulic deep drawing machine which is currently mounted in the manufacturing processes lab at An-Najah University and used by students to perform experiments on deep drawing. We found the experience gained very useful in terms of obtaining a properly working DDM, as well as enhancing the students' abilities to understand the concept of deep drawing in particular and the concepts of design and construction of machines in general. The direct cost of the DDM was about 2000$; of course this is very cheap if compared with a similar machine to be purchased from abroad.

REFERENCES

1. **Groover, (1996),** Fundementals of Modern Manufacturing, Printice-Hall Publ., 513-523.
2. **Schey, (1987),** Introduction to Manufacturing Processes, McGRAW-HILL Publ., 314.
3. **Hosford and Cadell, (1983),** Metal Forming, Mechanics and Metallurgy, Prentice Hall, 231.
4. **Shigly, (2008),** Mechanical Engineering Design, McGRAW-HILL Publ, 112, 543

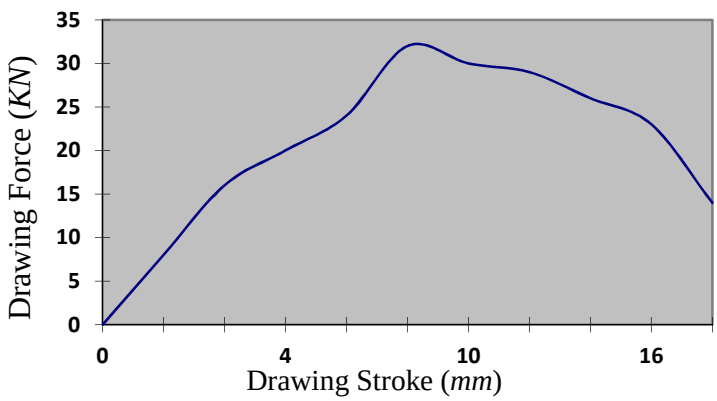

Fig. (13): Sample Result: Drawing Force vs Drawing Stroke